800W Parallel (N+1) with PFC

New

- PF>0.98@230VAC
- Built in remote sense
- Remote ON/OFF control
- Built in power good signal output
- Can adjust from 20~100% output voltage by external control 1-5V
- Protections: overload/ over voltage/ over temperature/ short circuit
- 5 years limited warranty
- F680SCN 290 × 121 × 68(mm)

AC input voltage range.....180~260VAC (260~370VDC)
Input frequency.....47~63Hz
Inrush current .....cold start, 30A/115VAC, 60A/230VAC
Input leakage current.....＜2mA/ 230VAC
Line regulation (full load) .....≤±0.5%
Output voltage adjust range .....±3%
Output overload protection .....105~115%, current limiting, delay shut down, re-power on to recover
Output over voltage protection .....110~135%, shut off, re-power on to recover
Withstand voltage.....I/P -O/P: 3.0KVAC/1min
I/P -F/G: 1.5KVAC/1min
O/P-F/G: 0.5KVAC/1min
Rise time.....50ms@full load (typical)
Hold up time .....20ms@full load (typical)
Operating temperature .....-20℃~+50℃
Safety standards.....meet GB4943, UL60950, EN60950
EMC standards.....meet GB9254, EN55022 classB
Cooling method .....fan
Weight 2.7kg/pcs

Model	DC Output		Load regul.	R&N	Efficiency
HF800W-SCN-12	12V	66A	0.5%	120mV	84%
HF800W-SCN-24	24V	33A	0.5%	240mV	88%
HF800W-SCN-48	48V	16A	0.5%	480mV	89%
HF800W-SCN-60	60V	13A	0.5%	500mV	90%
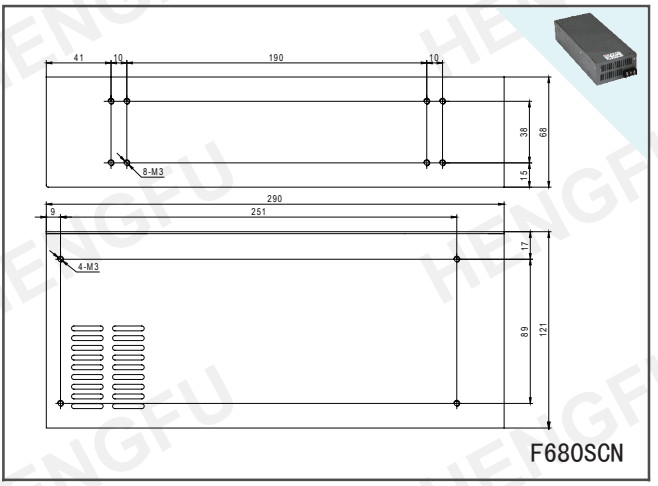
Drawing