25W Single Output M2 Series

- Universal AC input / full range
- Miniature size, high power density
- Top international brand components for key parts
- UL, CE approved (refer to spec. of each series)
- Protections: overload/ over voltage/ short circuit
- 5 years limited warranty
- F6025MW 78 × 51 × 28(mm)

AC input voltage range.....88~264VAC (124~370VDC)
Input frequency.....47~63Hz
Inrush current .....cold start, 20A/115V, 40A/230V
Input leakage current.....＜1mA/ 230VAC
Line regulation (full load).....≤±0.5%
Voltage adjust range.....±10%
Output overload protection .....105~130%, hiccup mode, auto recovery
Output over voltage protection .....clamping by zenor diode
Withstand voltage.....I/P -O/P: 3.0KVAC/1min
I/P -F/G: 1.5KVAC/1min
O/P-F/G: 0.5KVAC/1min
Rise time.....50ms@full load (typical)
Hold up time .....20ms@full load (typical)
Operating temperature .....-20℃~+70℃ (refer to the derating curve)
Safety standards.....meet GB4943, UL60950, EN60950
EMC standards.....meet GB9254, EN55022 classB, EN55024
EN61000-3-2,3, EN61000-4-2,3,4,5,6,8,11
Cooling method .....convection
Weight & packing.....0.18kg, 90pcs/ CTN

Model	DC Output		Load regul.	R&N	Efficiency
HF25W-SSM-5	5V	5.0A	0.5%	80mV	78%
HF25W-SSM-12	12V	2.1A	0.5%	120mV	82%
HF25W-SSM-15	15V	1.7A	0.5%	120mV	82%
HF25W-SSM-24	24V	1.1A	0.5%	150mV	85%
HF25W-SSM-48	48V	0.57A	0.5%	150mV	85%
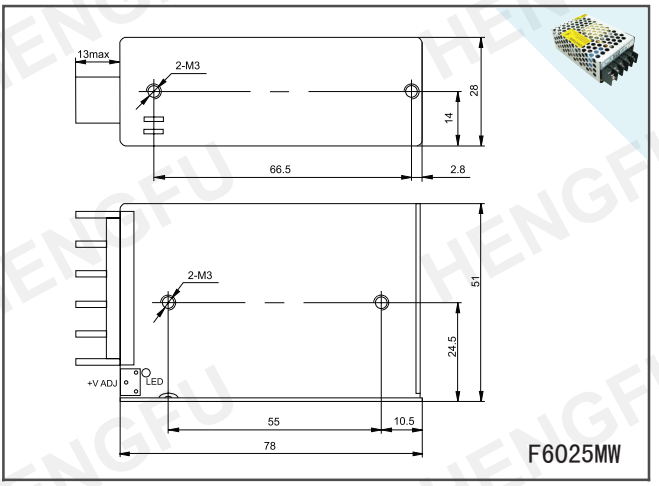
Drawing